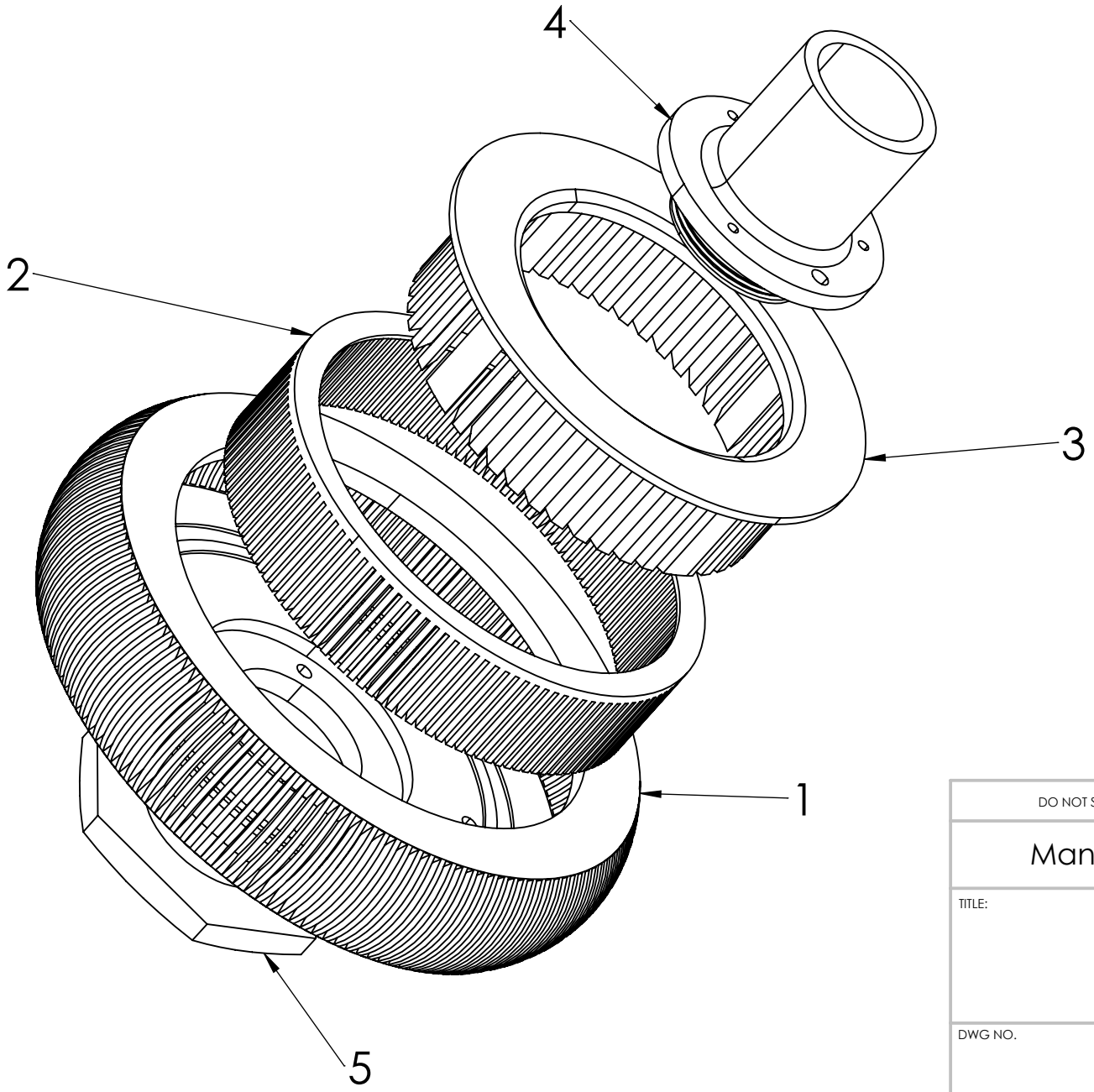

DO NOT SCALE DRAWING	REVISION
Mano Engineering, LLC	
TITLE: Kraft Wheel	
DWG NO.	A4
SCALE:1:2	SHEET 1 OF 6

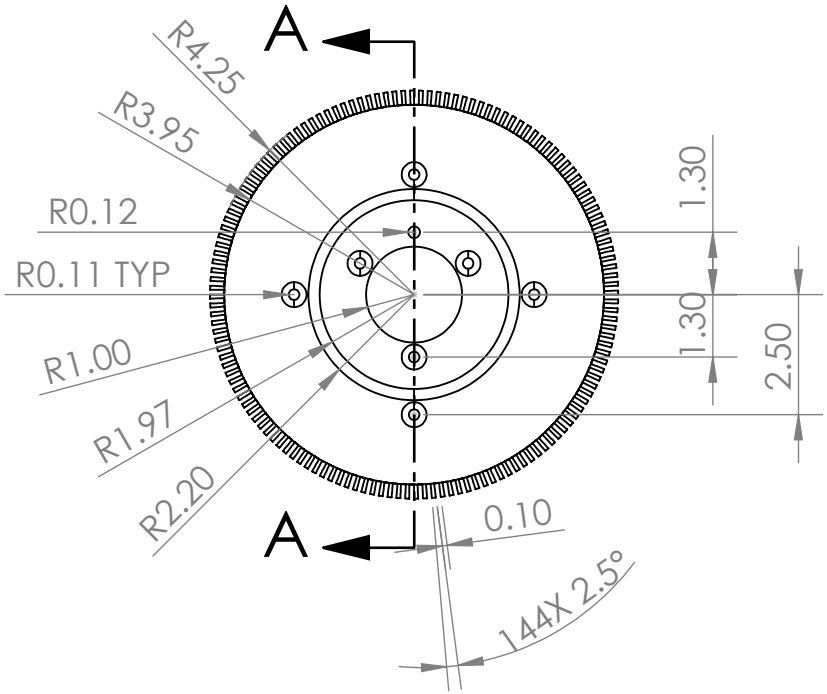

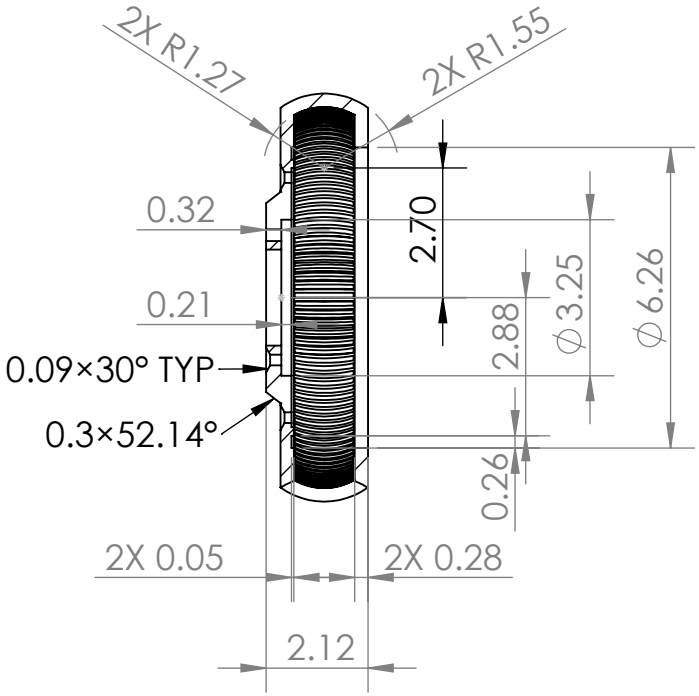

SECTION A-A

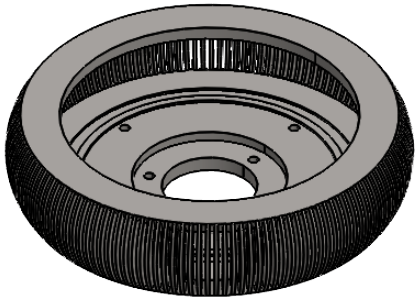

UNLESS OTHERWISE SPECIFIED: DIMENSIONS ARE IN MILLIMETERS SURFACE FINISH: TOLERANCES: LINEAR: ANGULAR:	FINISH: Plain				DEBURR AND BREAK SHARP EDGES	DO NOT SCALE DRAWING / REVISION
						Mano Engineering, LLC
	NAME	SIGNATURE	DATE			TITLE: Main Cheeze Wheel
DRAWN						
CHK'D						
APPV'D						
MFG						
Q.A				MATERIAL: 15-5 PH Stainless Steel		DWG NO. A4
				WEIGHT: 6.576 lbs		SCALE:1:4 / SHEET 2 OF 6

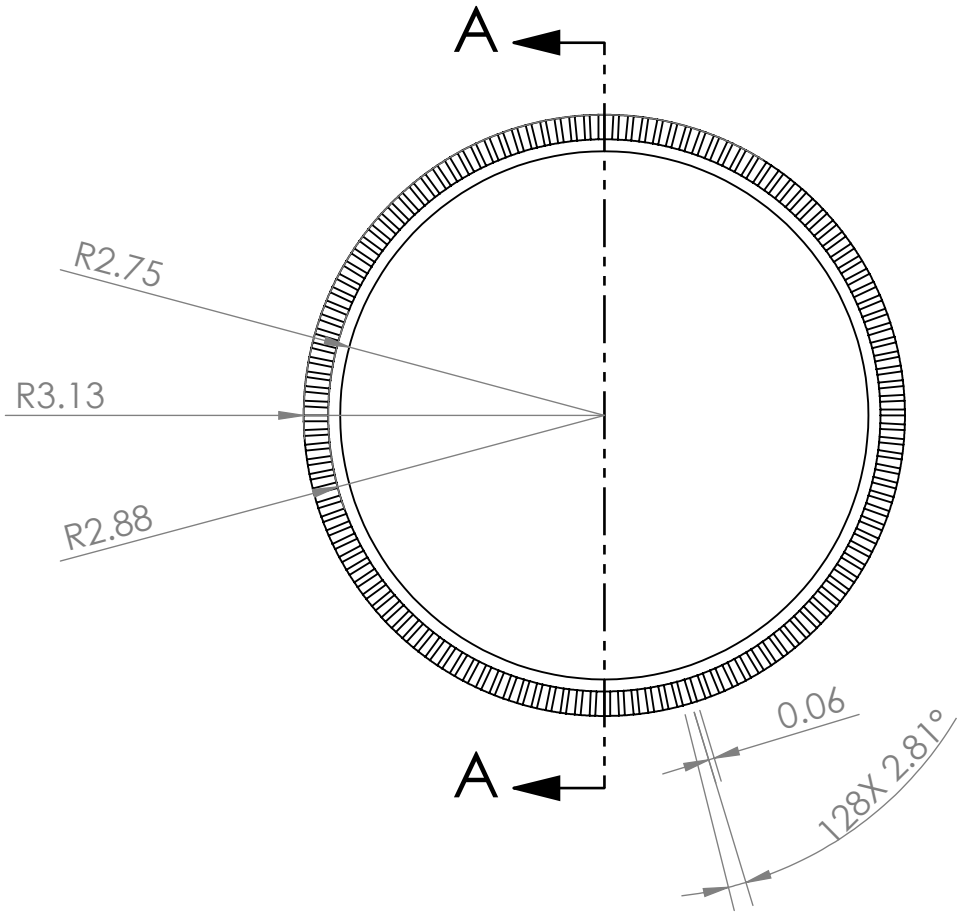

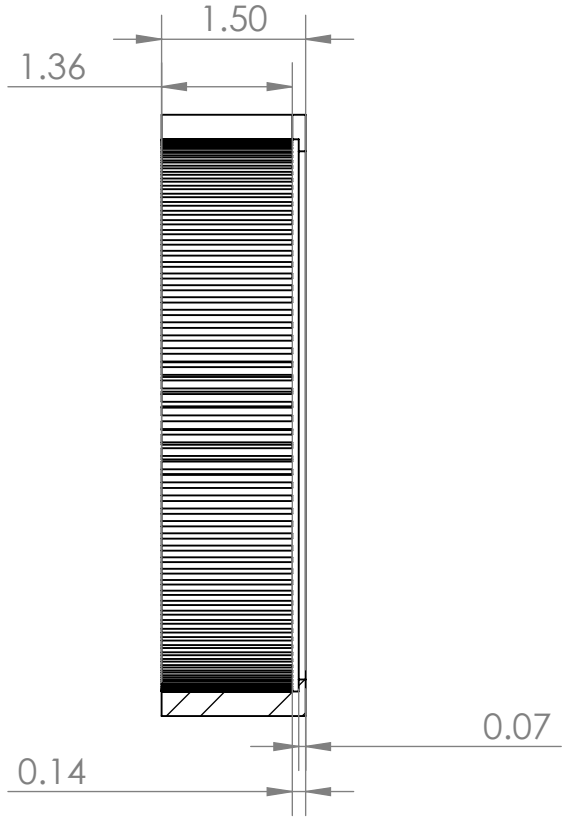

SECTION A-A

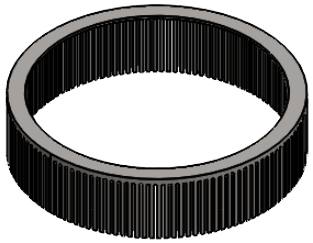

UNLESS OTHERWISE SPECIFIED: DIMENSIONS ARE IN MILLIMETERS SURFACE FINISH: TOLERANCES: LINEAR: ANGULAR:	FINISH: Plain				DEBURR AND BREAK SHARP EDGES	DO NOT SCALE DRAWING / REVISION
						Mano Engineering, LLC
	NAME	SIGNATURE	DATE			TITLE: Cheese Wheel Part
DRAWN						
CHK'D						
APPV'D						
MFG						
Q.A				MATERIAL: 15-5 PH Stainless Steel		DWG NO. A4
				WEIGHT: 1.359 lbs		SCALE:1:2 / SHEET 3 OF 6

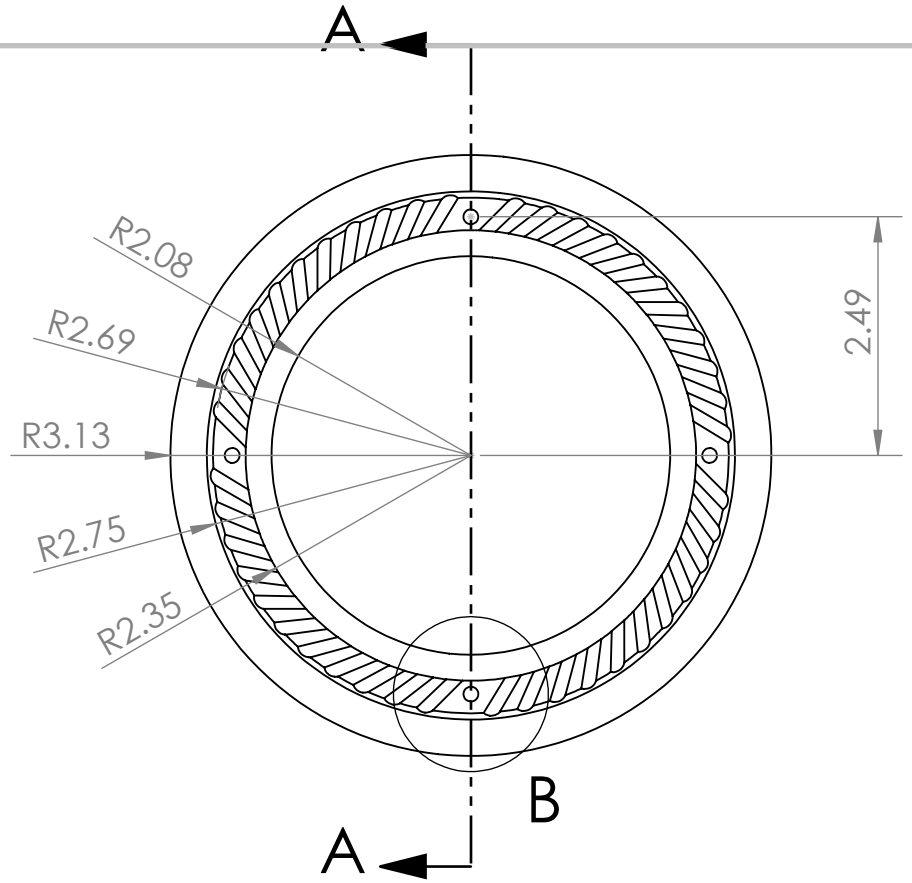

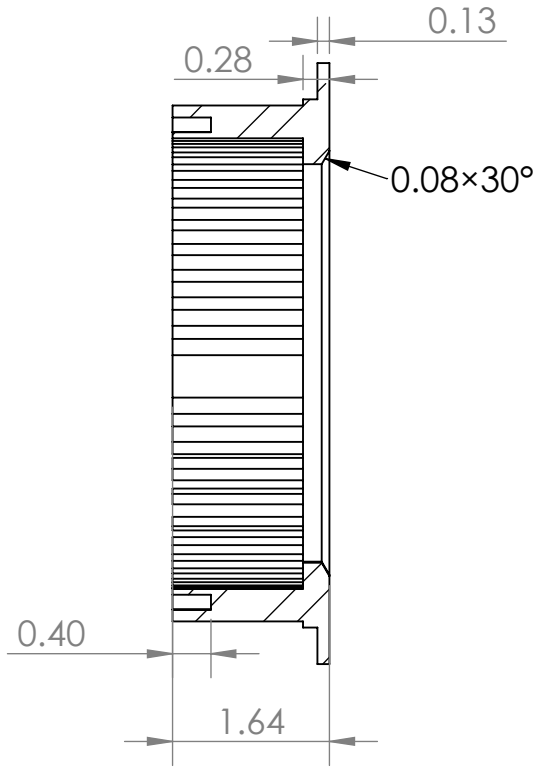

SECTION A-A

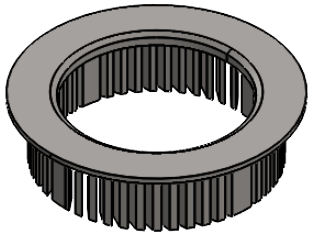

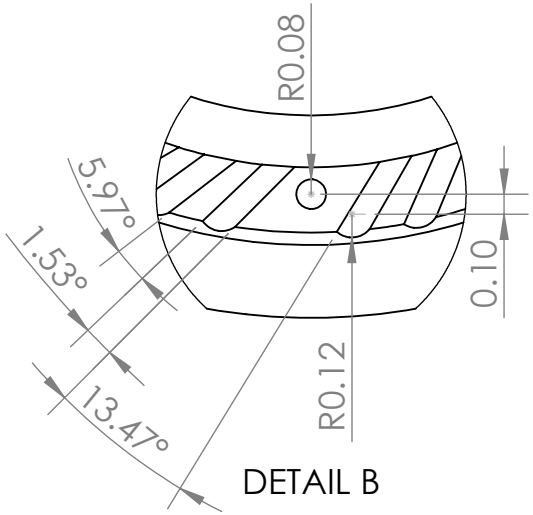

DETAIL B

SCALE 1 : 1

UNLESS OTHERWISE SPECIFIED: DIMENSIONS ARE IN MILLIMETERS SURFACE FINISH: TOLERANCES: LINEAR: ANGULAR:	FINISH: Plain				DEBURR AND BREAK SHARP EDGES	DO NOT SCALE DRAWING / REVISION
						Mano Engineering, LLC
	NAME	SIGNATURE	DATE			TITLE: Crown Wheel Piece
DRAWN						
CHK'D						
APPV'D						
MFG						
Q.A				MATERIAL: 15-5 PH Stainless Steel		DWG NO. A4
				WEIGHT: 2.117 lbs		SCALE:1:2 / SHEET 4 OF 6

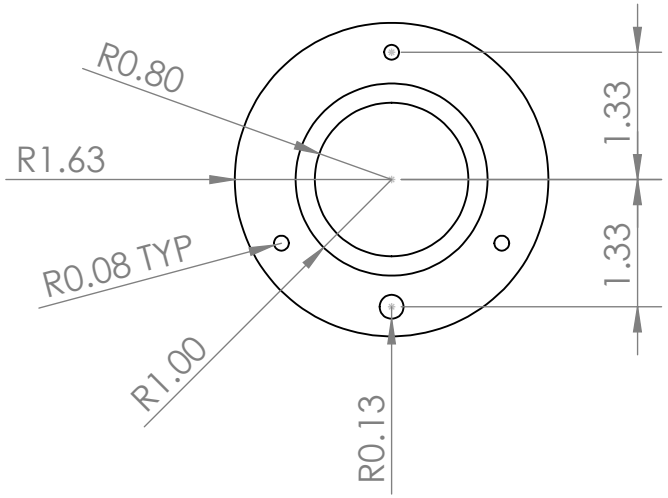

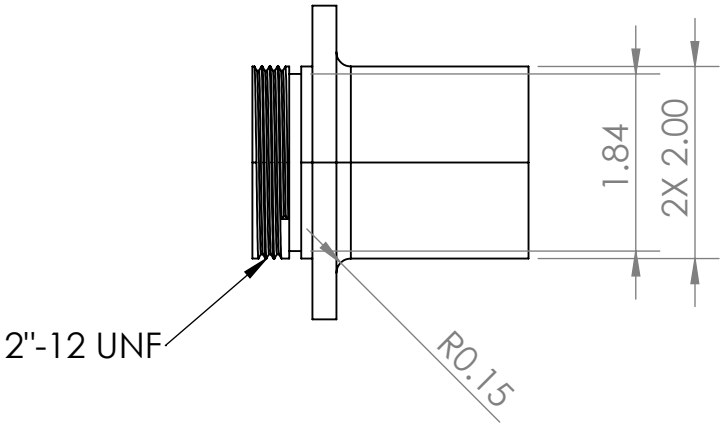

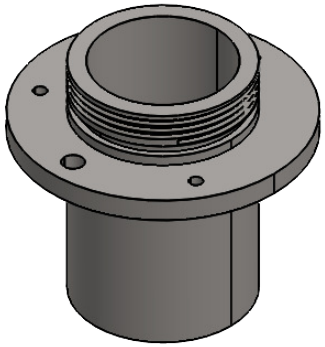

UNLESS OTHERWISE SPECIFIED: DIMENSIONS ARE IN MILLIMETERS SURFACE FINISH: TOLERANCES: LINEAR: ANGULAR:	FINISH: Plain				DEBURR AND BREAK SHARP EDGES	DO NOT SCALE DRAWING / REVISION
						Mano Engineering, LLC
	NAME	SIGNATURE	DATE			TITLE: Inner Part
DRAWN						
CHK'D						
APPV'D						
MFG						
Q.A				MATERIAL: 15-5 PH Stainless Steel		DWG NO. A4
				WEIGHT: 1.288 lbs		SCALE:1:2 / SHEET 5 OF 6

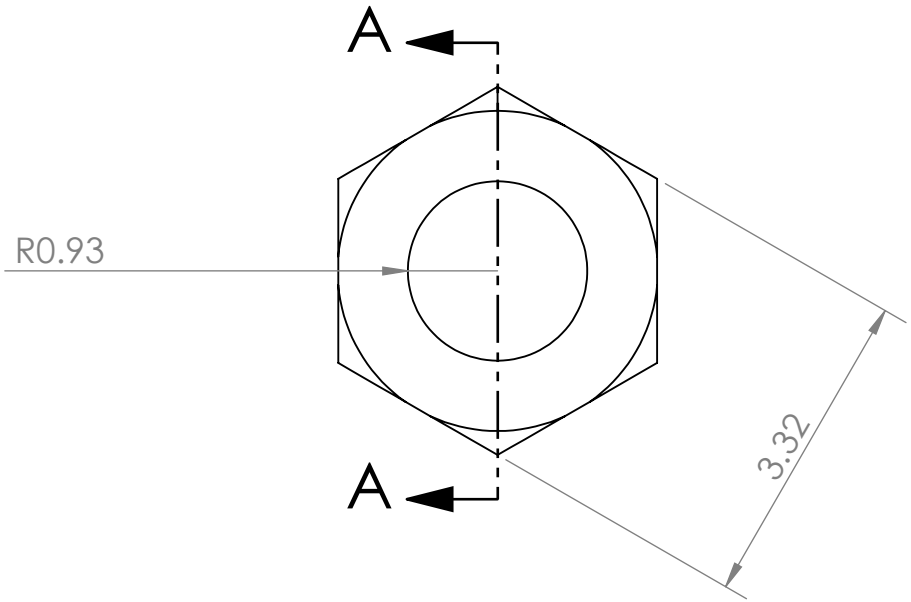

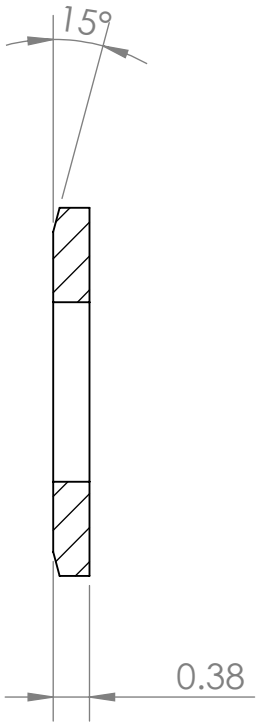

SECTION A-A

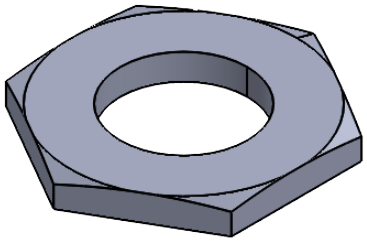

UNLESS OTHERWISE SPECIFIED: DIMENSIONS ARE IN MILLIMETERS SURFACE FINISH: TOLERANCES: LINEAR: ANGULAR:	FINISH: Plain				DEBURR AND BREAK SHARP EDGES	DO NOT SCALE DRAWING / REVISION
						Mano Engineering, LLC
	NAME	SIGNATURE	DATE			TITLE:
DRAWN						Kraft Wheel Nut
CHK'D						
APPV'D						
MFG						
Q.A				MATERIAL: 15-5 PH Stainless Steel		DWG NO. A4
				WEIGHT: 0.746 lbs		SCALE:1:2 / SHEET 6 OF 6